4th ICRIEMS Proceedings
Published by The Faculty Of Mathematics And Natural Sciences
Yogyakarta State University, ISBN 978-602-74529-2-3

Learning Cycle-7E Assisted Mind Mapping to Change Students' Mental Models on Momentum and Impulse

Zaenudin[1, a)], A. Suhandi[2] and L. Hasanah[3]

[1]*Pendidikan Fisika Sekolah Pascasarjana, Universitas Pendidikan Indonesia, Bandung 40154, Indonesia*
[2,3]*Departemen Pendidikan Fisika, Universitas Pendidikan Indonesia, Bandung 40154, Indonesia*

[a)] Corresponding author: zaenudinzalla@gmail.com

Abstract. The purpose of this study was to determine changes of students' mental models in MAN 1 Bandung (Senior High School) as effect of implementation of learning cycle-7E assisted mind mapping, to determine changes in models of mental a test given in the form of open-ended questions as many as 16 questions in 4 cases on the momentum and impulse, the test was given to determine students' level of understanding on the physical phenomena that occur in daily life, the test contains three dimensions of knowledge that is the content knowledge, constructs knowledge and procedural knowledge. This study uses a pretest-posttest control group design, subjects of research was taken with sampling random amount two groups of about on experimental group amount 36 students and control group amount 35 students and was used data analyze of change percentage. The results of this study indicated that on experimental group, changing of level of understanding is better than control group. Then, level of understanding categorized into students' level of mental models, from the analysis of the data showed that there was an increase in the level of mental models, on the scientific level has increased amount 60% significantly, while the initial level decreased and on control group has only increased amount 40%. From this study it can be concluded that learning on momentum and impulse with learning cycle-7E assisted mind mapping proven to change students' mental models effectively, so that it can cope with students' learning difficulties in correlating the concept with the phenomena of physics in daily life experiences.

INTRODUCTION

Students' ability to understand a phenomenon closely related to the mechanism of thinking used to describe and explain the phenomenon, and this is what is called a mental model. The mental models are structures constructed knowledge of the individual to understand and describe their experiences [1]. The students' mental model should be built gradually during the learning process. When students learn about science, they also gain knowledge in a presentation using a scientific model, therefore, to form a mental model of the necessary scientific learning process [2]. Students also build their mental models, they have to learn and try to understand the scientific knowledge during the learning process [3]. This implies that in the process of learning, mental models is a framework formed by the students to explain their learning experience. The result of this is a learning experience that can be identified mental models. Students' mental models can be classified into three categories based on their level of understanding that is scientific, synthetic and initial [4]. So that the learning process of science can be more meaningful, the learning process should be directed to lead the students learn how to think is intuitive and analytic thinking and foster trust in the ability of self. The concepts have been studied can be remembered by the students as a more meaningful concept given such a vital role, we need a proper model of physics learning in order to guide the students to have the ability to understand the phenomenon well physics through fun learning with a series of activities that make students active learning.

The reality on the ground is still found the process of learning physics that does not comply with the demands of the ideal, it affects the mastery of the physics concepts, both owned by the students as well as students, after they get the learning process perceived understanding of the concept is very less and not as expected, for example other research performed stated that students still have trouble understanding the concept of momentum, because most students still looking at the concept of momentum is equal to the energy concept is a scalar quantity [5]. The concepts of physics considered an abstract concept that is difficult to study ranging from elementary to university level [6], it is also almost the same as that experienced by the students that the subject matter of the most difficult to be understood one of them is momentum and impulse [7], the concept of

momentum is still considered abstract so as to analyze require mental activity [8]. The difficulties become an important issue in the learning process of physics is the ability of students to construct knowledge, and states that scientific concepts students are learning will be complicated when associated with mathematics. The ability of students to understand the concept of abstract physics is closely related to the level of understanding of the students [9]. From the above results and field observation studies may imply that 1) only a small proportion of students who have an understanding of construction physics concepts correctly. 2) The inability to relate concepts students obtained with the phenomenon to be studied. 3) The occurrence of confusion and misconceptions caused mental models of students at the level of understanding is still low (initial and synthetic).

Based on the problems found, physics learning in school needs to achieve a predetermined goal. One model of learning that can optimize and enhance the understanding and mastery of concepts is learning with a constructivist approach, because closely related to the ability to understand the level of understanding on mental models, students should be given an evaluation or diagnosis of mental models in understanding the phenomenon. There are many models of learning constructivism which can increase and mastery of concepts one of which is model learning cycle-5E (*engage-explore-explain-elaborate-evaluate*), because in addition to proven unable to show changes in understanding of the concept and also gives students the opportunity construct a new of found knowledge with experience everyday life were found [10], and some research also uses the analogy linking abstract scientific concepts and complicated with new concepts acquired during the learning process then compares the similarity to real life events, learning cycle-5E can also decreases alternative conceptual or misconceptions on students [11], this research used model of learning by stages fuller learning cycle-7E (*elicit-engage-explore-explain-elaborate-extend-evaluate*) assisted mind mapping. Mind mapping chosen because it can encourage creativity and train students to be able to analyze the concept. Additionally, mind mapping can also increase the speed of thought [12], in physics learning with mind mapping approach can also improve student learning outcomes. Mind mapping is given at this stage of exploration because it can be determined the ability of students to provide a scientific rationale and mastery of concepts that are owned and preclude the possibility of alternative conceptions that occur [13].

Model learning cycle-7E has several advantages including: to improve learning outcomes, can improve critical thinking skills and science processes skills, application of learning cycle-7E can also improve students' generic science skills, while research and state that learning cycle-7E can improve scientific attitude, can increase student motivation and learning outcomes in physics [14]. Learning cycle-7E can also provide opportunities for teachers to evaluate s students' progress in achieving educational goals [11]. In some other studies physics learning application learning cycle-7E can also lead to: 1) the achievement of physics better capabilities; 2) better mastery of concepts; 3) an increase in positive attitudes toward physics; 4) an increase in positive attitude towards the learning process of physics; 5) increase the ability of reasoning and 6) science process skills that are superior [15].

METHOD

This study uses a quasi-experimental design with non-equivalent pretest-posttest, the experimental group has been given a model learning cycle-7E assisted mind mapping amount 36 students and one group has been given a model learning cycle-7E without mind mapping amount 35 students as the control group, pretest and posttest given in the form of open-ended questions to determine students' level of understanding of physics phenomena in daily life experience with 16 questions on four cases. The research was conducted in MAN 1 Bandung with samples were selected randomly on 10th grade students. The study design illustrated as Table 1 below:

TABLE 1. Research design

Group	Pretest	Treatment	Posttest
Experimental	X_E	O_E	X_E'
Control	X_C	O_C	X_C'

Notes:
X_E = Results of pretest the level of understanding of experimental group
X_C = Results of pretest the level of understanding of control group
O_E = Treatment learning cycle-7E assisted mind mapping
O_C = Treatment learning cycle-7E without mind mapping
X_E' = Results of posttest the level of understanding of experimental group
X_C' = Results of posttest the level of understanding of control group

To determine changes in the level of students' mental models prior analysis of test results comprehension level (level of understanding) both pretest and posttest against physical phenomena that occur in their daily lives

by providing the questions raised can describe the alternative conceptions and level of understanding. Results pretest and posttest were analyzed based on five levels of understanding which levels of understanding are No Understanding (NU), Alternative Conception (AC), Partial Understanding with Alternative Conception (PU-AC), Partial Understanding (PU) and Sound Understanding (SU) as shown in the following Table 2 [13][12][1]:

TABLE 2. Evaluation rubric for understanding levels based on the physics phenomena in daily life

Level of Understanding	Score	Criteria
SU	4	Answer correctly to provide the concept and the reasons are clear, focused and accurate, including scientific definitions.
PU	3	Answer correctly to provide the concept and the reasons are less focused and clear.
PU-AC	2	Answer less true because it provides a concept that lacks focus and did not give a reason, Answer far from being scientific information.
AC	1	Providing an answer to the wrong conceptual.
NU	0	Unanswered questions, repeating questions, leaving blank.

In order to elicit the mental models of students, a data collection based on open-ended questions about the physics phenomena is presented with some questions that follow are:

Problem 1 #

1. A child playing skateboard on a steep road is more dangerous than in the flat road, explain why?
2. What the concept of physics can explain the event's number one? Explain why!
3. Give examples of other phenomena associated with physics concepts in question number two and explain why!
4. Explain the concepts of physics in question number two!

Problem 2 #

1. Have you ever watched a boxing match on television? Which you have seen is a modern boxing match, earlier in the 4th century (450 A.D) the sport of boxing is still using his bare hands without covered or iron covered, the first famous boxer named Theagenes at the time of the Greek Thaos become Olympic champion, he did the game as much as 1,406 times using boxing gloves made of iron. Most of the opponents were killed when fighting against him. A British boxer named John Broughton in 1729 became British boxing champion and he was the first to introduce and use boxing gloves as first rules of boxing. Explain how the boxing gloves can protect boxers, especially the brain injury?
2. What the concept of physics can explain about that incident? Explain why!
3. Give examples of other phenomena associated with the concepts of physics in question number two and explain why!
4. Define the concept of physics in question number two!

Problem 3 #

1. If we notice when a parachutist landed frequently in a state bent legs, explain why?
2. What the concept of physics can explain the phenomena that occurs in about number one?
3. Give examples of other phenomena related to physics concepts in question number two and explain why?
4. Explain the concepts of the physics in question number two?

Problem 4 #

1. In a park or garden we often see a faucet that rotates by itself when the water out of the nozzle (garden sprinkler), describe why the taps can spinning by itself when the water came out?
2. What the concept of physics can explain about that incident? Explain why!
3. Give examples of other phenomena associated with the physics concepts in question number two and explain why!
4. Define the concept of physics in question number two!

The answer given to the four problems above, then analyzed by using a percentage score obtained, then categorized the level of understanding by rubric models of mental, that mental models have three classifications scientific, synthetic and initial, as in the following Table 3 [4]:

TABLE 3. Evaluation rubric for mental models

Mental models	Content	Level of Understanding
Scientific	Perceptions coincide with scientific knowledge: the answer at the level of 3 (PU) or level 4 (SU).	$\begin{bmatrix} 3 & 3 & 3 & 3 \\ 4 & 4 & 4 & 4 \end{bmatrix}$
Synthetic	Perceptions are only partially coincide or do not coincide with scientific knowledge.	$\begin{bmatrix} all\ other\ posibilities \\ score\ 0-4 \end{bmatrix}$
Initial	Perceptions everything do not coincide with scientific knowledge: answers on level 0 (NU), 1 (AC) and 2 (PU-AC)	$\begin{bmatrix} 0 & 0 & 0 & 0 \\ 1 & 1 & 1 & 1 \\ 2 & 2 & 2 & 2 \end{bmatrix}$

To understand the rubric given in Table 3, for example, to identify students' level of understanding, they are given 4 problems and each problem includes four questions, as indicated by columns the matrix in Table 3, while the rows in the matrix show answers according to the level achieved, for example, a student can answer about a impulse problem by giving a reason and his answer correctly to provide the concept and the reasons are clear, focused and accurate, including scientific definitions, so he can be grouped to level of Sound Understanding (SU) with a score of 4. Or other possibilities he can only answer questions with answer correctly to provide the concept and the reasons are less focused and clear, so he is only at level of Partial Understanding (PU) with a score of 3, so he can be classified into scientific mental models.

RESULTS AND DISCUSSION

Some of the results of practical and theoretical studies related to the sources of conception formation related to the formation of students' mental models show that the students' mental models are formed by several factors including: teacher instruction, science textbooks, language and sentences, experiences and daily life, environment society [17]. Interpretation of teacher instruction is related to the implementation of certain learning strategies implemented in order to construct students' conceptions. At the time of study, students construct their mental models based on their experiences, interpret and explain what they see, reflect on their understanding through scientific argument in answering the given problem. So hopefully there will be conceptual change that is better than before. And one of the learning instruction offered in this study is the learning cycle-7E assisted mind mapping. In addition there are also other studies that examine the efforts to change the students' concept through reading science text and eye-tracking methodology, and it turns out that by the method the concept of students to an event can also conceptual change [18]. For beginner learners who like to read science text is a good thing in constructing knowledge is more meaningful, but for students who do not like to read it will be an obstacle, and in this study more focused on instructional to change the concept of self-student.

Findings obtained from the questions given to the experimental group and control group showed that on experimental group capabilities in explaining physics phenomena in daily life experience is more completely and accurate focusing in accordance with the keywords indicator answers. This is because students trained connect the concept with the physics phenomena in the exploration stage, and at this stage also assisted mind mapping.

To be able to answer on questions about the phenomena of momentum and impulse, students should be able to connect concepts and scientific knowledge gained by physics phenomena presented, in addition to accurate focus students also have to give a reason properly, in the reasons given, there must be words keywords that contain scientific concepts within the context of the question presented. For example as in first question from second issue below:

"Explain, how the boxing gloves can protect boxers, especially the brain injury?"

To answer this question the student must can construct previously knowledge with choose the right keywords which consists of the **brain organ; vibration of the brain; force; contact time; impulse and momentum**. So that the scientific concept of the students' answer is when the head is beaten suddenly by hand without a glove, it will happen vibration of brain in the head, the magnitude of the average force is given the hand to the brain is done abruptly in the interval very short time so that it can injure the brain more, but with the boxing gloves will extend the time the style of the head so that the vibration of the brain is reduced, this is the concept of impulse is the change of momentum or force multiplication result with interval time.

The findings in this study also show some students having difficulties in associating other examples in daily life such as on the issue of the faucet garden sprinkler, with the following questions:

"Give examples of other phenomena associated with the concepts of physics in question number two and explain why!"

To be able to answer this question the student must be able to correctly answer the phenomenon in accordance with the physics concept, because the questions on each problem have tiered pattern of interrelated students must be able to answer the first question above, as a prerequisite to answer the next question. For example in the question about the garden sprinkler as showed Figure 1.

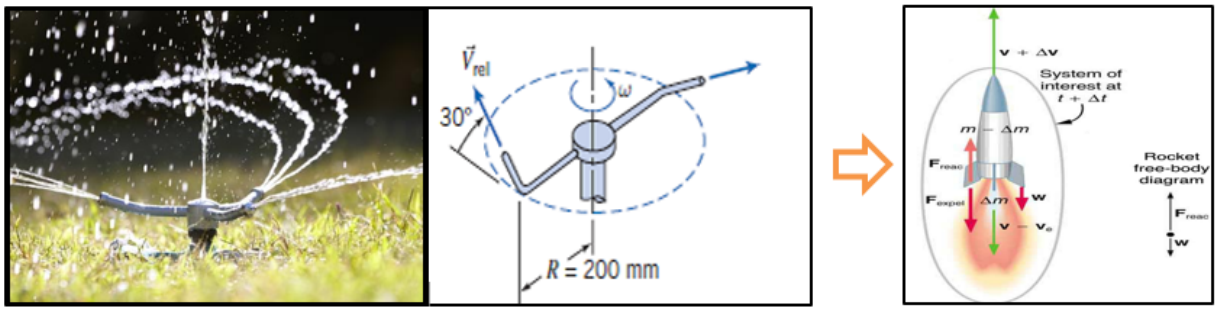

FIGURE 1. A garden sprinkler works to spray water environment (left) and momentum conservation works for a rocket (right)

Figure 1 shows that the garden sprinkler rotate itself as there is water coming out of the two nozzle openings, resulting in momentum conservation shortly after the water exits so that water will push the faucet as the reaction of the outgoing water leaving each nozzles in the tangential direction (Newton's third law), for the exiting water flow the magnitude is proportional to the rotation or angular speed $(v = \omega \, x \, r)$, where ***r*** is the radius from the axis of rotation to the centerline of each nozzles. There are several keywords to answer the question of which is **momentum conservation; water flow and angular speed**. If the student is able to understand the problem correctly, the focus is then easily the student can also provide another example association of flying rocket events., and but many of the students as shown in the Table below are having difficulty providing examples of other phenomena such as the garden sprinkler problems.

Based on students' understanding levels concerning the questions are presented in spare table. The students' understanding on momentum and impulse is shown in Table 4, accordingly to answers given to 16 questions of four cases.

TABLE 4. Distribution of understanding levels

Experimental Group							Control Group						
Pretest For Level of Understanding	Posttest						Pretest For Level of Understanding	Posttest					
	P1	P2	P3	P4	Total (f)	(%)		P1	P2	P3	P4	Total (f)	(%)
SU [0]	1	0	1	2	4	4.55	SU [0]	0	0	1	2	3	3.75
PU [1]	6	9	4	5	24	27.27	PU [1]	5	7	3	2	17	21.25
PU-AC [8]	7	5	10	2	24	27.27	PU-AC [7]	6	8	9	9	32	40.00
AC [10]	5	8	5	5	23	26.14	AC [9]	4	7	8	4	23	28.75
NU [5]	3	0	4	6	13	14.77	NU [4]	2	0	1	2	5	6.25
Total					88	100	Total					80	100

As seen in Table 4, no student can understand the phenomena of momentum and impulse scientifically (SU or PU) when pretest is given to both groups, they cannot answer in a way correctly to provide the concept and the reasons are clear, focused and accurate, including scientific definitions. But after being given this treatment on the experimental group there is four students can answer with give scientific argument (SU= 4.55 %) and the control group there is three students get Sound Understanding (3.75%), if we compared both groups, so seen experimental group is higher than control group.

From the results of further tests carried out data collection for level of students' mental models based on their level of understanding on the pretest and posttest, as shown in Table 5:

TABLE 5. Distribution of mental models change for experimental group and control group

Mental Models for Experimental Group							Mental Models for Control Group						
Pretest	Posttest						Pretest	Posttest					
	P1	P2	P3	P4	*f*	*(%)*		P1	P2	P3	P4	*f*	*(%)*
Initial [23]	15	13	19	13	15	41.67	*Initial [20]*	12	15	18	15	15	42.86
Synthetic[12]	14	14	12	16	14	38.89	*Synthetic[14]*	18	13	13	16	15	42.86
Scientific [1]	7	9	5	7	7	19.44	*Scientific [1]*	5	7	4	4	5	14.28

Table 5 shows to us that just over 19 % of students were classified at the scientific mental model by identifying all reasons for momentum and impulse phenomena completely after they were given learning cycle-7E assisted mind mapping. That is difference if compared with control group is only get 14.28% at the scientific mental model. Often teachers are difficulty provide examples of phenomena in everyday life associated with the concept of momentum and impulse, as well as students as they already can build prior knowledge related concepts acquired in the classroom, students are also difficult to connect between the concepts of physics that have been obtained from the learning activities the class with the phenomena of physics in everyday life.

In the experimental group there are a number of students as much as 60%, which can explain the physics phenomena related momentum and impulse with the correct concept, focus, accurate and can give a scientific explanation (Sound Understanding). However, a number of students as much as not being able to answer correctly, lack of focus and inaccurate. Having obtained the data of each level further calculated the percentage of the number of students at each grade level good mental models of control nor experimental group, then compared the difference between the two groups, and obtained on experimental group for level of nonscientific (initial) decreased amount 34.78% and it increased amount 60% at the level of scientific and synthetic. It is better when compared to a control group with the change in the level of nonscientific (initial) decreased amount 25% and an increase of 40% on the level of scientific (synthetic). Whereas in the synthetic model both experimental and control groups have larger numbers than scientific and initial that is caused some students are inconsistent in answering questions so that they are on a possible score of 0-4.

The analysis of the data showed that the experimental group changes students' mental models scientific level 20% higher than the control group, this is due to the exploration phase on the learning cycle-7E, after students do the work practicum in laboratory they have to answer the questions of investigation on the worksheet laboratory and subsequent students are assigned independently create mind mapping to connect the concept obtained by physic phenomena that occur when working on practical and assigned to provide examples of such phenomena in daily experience, so that student who learn by using learning cycle-7E assisted mind mapping can improve change of mental models is better than students who learned without assisted mind mapping, as well as the results of study by some researchers that learning cycle-7E can develop students' ability to construct knowledge [14]. The result also showed that mind mapping is an effective tool if combined with an instructional for improving level of understanding so students can construct their knowledge as more meaningful.

CONCLUSIONS AND IMPLICATION

From the results and analysis of data from this study can be concluded that a change in mental models of students significantly by 20% higher to students who have been given the learning cycle-7E assisted mind mapping if compared to students who have been given the learning cycle-7E without mind mapping assisted on momentum and impulse. This research have implication that this learning model can be further applied to physics educational purpose so students can define scientifically the physics phenomena had been occurred in accordance with the construction of scientific understanding held properly.

ACKNOWLEDGMENTS

We wish to acknowledge LPDP KEMENKEU RI for the financial supports of Thesis Program 2017, we also would like to thank headmaster MAN 1 Bandung who has given permission to place this study and Dr. Muslim, M.Pd who has provided input constructive advice to this study.

REFERENCES

1. S. Sternberg and J. Robert, Psikologi Kognitif Edisi ke Empat, Tj Yudi santoso S.Fil. Yogyakarta: Pustaka Pelajar, 2008.
2. A. G. Harrison and D. F. Treagust, Laerning about Atoms,Molecules, and Chemical Bonds : A Case Study of Multiple-Model use in Garde Chemistry, *Science Education* ***84*****(3)**, 352-381 (2000).
3. G. D. Chittleborough, D. F. Treagust, T. L. Mamiala and M. Mocerino, Students' Perceptions of The Role of Models in the Process of Science and in the Process of Learning. *Research in Science and Technological Education* ***23*****(2)**, 195-212 (2005).
4. S. Vosniadou and W. F. Brewer, Mental Models of the Earth: A Study of Conceptual Change in Childhood. *Cognitive Psychology,* ***24***, 535-585 (1992).
5. S. Karim, D. Saepuzaman and S. P. Sriyansyah, Diagnosis Kesulitan Belajar Mahasiswa Dalam Memahami Konsep Momentum, *JPPPF -Jurnal Penelitian & Pengembangan Pendidikan Fisika* ***1*****(1)**, 85-90 (2015).
6. A. Saglam and Y. Devecioglu, Student Teacher's Levels of Understanding and model of understanding about Newton's Law Motion, *Asia Pacific Forum on Science Learning and Teaching* ***11*****(1)**, 1-20 (2010).
7. S. Aycan and A. Yumusak, Lise Mufredatindaki Fizik Konularinin Anlasilma Duzeyleri,Turkey, 2003.
8. N. R. Ergul, Momentum Concept in the Process of Knowledge Construction. *Educational Sciences: Theory & Practice* ***13(3)***, 1897-1901 (2013).
9. M. A. Kurnaz and C. Eksi, An Analysis of High School Students' Mental Models of Solid Friction in Physics, *Educational Sciences: Theory & Practice* ***15*****(3)**, 787-797 (2015).
10. D. Yasemin and Kaymakci. Embedding Analogical Reasoning into 5E learning model : A study of the solar system. *Eurrasia Journal of mathematics, science & Technology Education* ***12*****(4)**, 881-991 (2016).
11. R. W. Bybee, J. A Taylor, A. Gardner, P. Van Scotter, J. C. Powell, A. Wesbrook and N. Landes, The BSCD 5 Instructional Mode : Origin and Effectivitiness, 2006.
12. T. Buzan, Buku Pintar Mind Map. Jakarta: Gramedia Pustaka Utama, 2010.
13. R. W. Bachtiar, S. Rilly, The Effectiveness of Learning Cycle Model Assisted by Mind Mapping Technique to Physics Conceptual Achievement According to Science Process Skill Students of SMKN 9 Malang, *International Conference on Mathematics, Science and Education (ICMSE)* ***1(2),*** 61-67 (2014).
14. Z. Aziz, Penggunaan Model pembelajaran Learning Cycle-7E Untuk Meningkatkan Hasil Belajar Siswa SMP pada Pokok Bahasan Usaha dan Energi, *Unnes Physics Education Journal (UPEJ)* ***2(3),*** 32-39 (2013).
15. I. Ergin, Constructivist approach based 5E model and.,*Latin American Journal of Physics Education* ***6*****(1)**, 14-20 (2012).
16. M. R. Abraham, V. M. William and S. A. Wesbrook, S. A cross-age study of the understanding of five chemistry concept, *Journal of research in Science Teaching* ***31*****(2),** 147-165 (1994).
17. J. W. Lin and M. H. Chiu, Exploring the Caracteristic and Diverse Source of Student Mental Model of Acids and Base, *International Journal of Science Education*, 771-803 (2007).
18. M. Mikkilä-Erdmann, M. Penttinen, E. Anto and E. Olkinuora, Constructing Mental Models during Learning from Science Text, *Springer journal* ***1(1)***, 63-79 (2016)